Centre Number						Candidate Number				
Surname										
Other Names										
Candidate Signature										

For Examiner's Use	
Examiner's Initials	
Question	Mark
1	
2	
3	
4	
5	
6	
7	
8	
TOTAL	

General Certificate of Education
Advanced Level Examination
June 2014

Chemistry CHEM5

Unit 5 Energetics, Redox and Inorganic Chemistry

Tuesday 17 June 2014 1.30 pm to 3.15 pm

For this paper you must have:
- the Periodic Table/Data Sheet provided as an insert (enclosed)
- a ruler with millimetre measurements
- a calculator.

Time allowed
- 1 hour 45 minutes

Instructions
- Use black ink or black ball-point pen.
- Fill in the boxes at the top of this page.
- Answer **all** questions.
- You must answer the questions in the spaces provided. Do not write outside the box around each page or on blank pages.
- All working must be shown.
- Do all rough work in this book. Cross through any work you do not want to be marked.

Information
- The marks for questions are shown in brackets.
- The maximum mark for this paper is 100.
- You are expected to use a calculator, where appropriate.
- The Periodic Table/Data Sheet is provided as an insert.
- Your answers to the questions in **Section B** should be written in continuous prose, where appropriate.
- You will be marked on your ability to:
  – use good English
  – organise information clearly
  – use scientific terminology accurately.

Advice
- You are advised to spend about 75 minutes on **Section A** and about 30 minutes on **Section B**.

Do not write outside the box

Section A

Answer **all** questions in the spaces provided.

1 (a) Write an equation for the process that has an enthalpy change equal to the electron affinity of chlorine.

[1 mark]

.....

1 (b) In terms of electrostatic forces, suggest why the electron affinity of fluorine has a negative value.

[2 marks]

.....

.....

.....

.....

1 (c) (i) Complete the Born–Haber cycle for silver fluoride by adding the missing species on the dotted lines.

[3 marks]

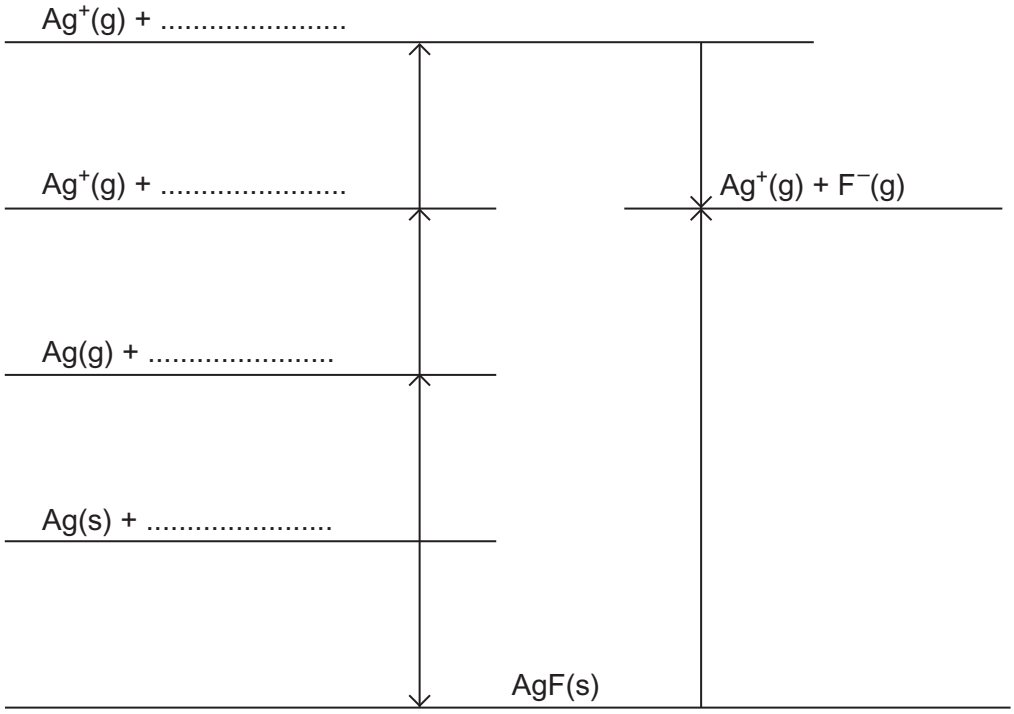

Do not write outside the box

1 (c) (ii) Use the cycle in Question **1 (c) (i)** and the data in **Table 1** to calculate a value, in kJ mol^{-1}, for the bond enthalpy of the fluorine–fluorine bond.

[2 marks]

Table 1

Enthalpy change	**Value / kJ mol^{-1}**
Enthalpy of atomisation for silver	+289
First ionisation energy for silver	+732
Electron affinity for fluorine	–348
Experimental enthalpy of lattice dissociation for silver fluoride	+955
Enthalpy of formation for silver fluoride	–203

.....

.....

.....

.....

.....

Question 1 continues on the next page

Do not write outside the box

1 (d) A theoretical value for enthalpy of lattice dissociation can be calculated using a perfect ionic model.

The theoretical enthalpy of lattice dissociation for silver fluoride is +870 kJ mol^{-1}.

1 (d) (i) Explain why the theoretical enthalpy of lattice dissociation for silver fluoride is different from the experimental value that can be calculated using a Born–Haber cycle.

[2 marks]

.....

.....

.....

.....

.....

[Extra space] .....

.....

1 (d) (ii) The theoretical enthalpy of lattice dissociation for silver chloride is +770 kJ mol^{-1}.

Explain why this value is less than the value for silver fluoride.

[2 marks]

.....

.....

.....

.....

.....

[Extra space] .....

.....

12

Turn over for the next question

DO NOT WRITE ON THIS PAGE
ANSWER IN THE SPACES PROVIDED

Do not write outside the box

2 **Table 2** shows some enthalpy change and entropy change data.

Table 2

	ΔH / kJ mol^{-1}	ΔS / J K^{-1} mol^{-1}
$AgCl(s) \longrightarrow Ag^+(g) + Cl^-(g)$	+905	
$AgCl(s) \longrightarrow Ag^+(aq) + Cl^-(aq)$	+77	+33
$AgF(s) \longrightarrow Ag^+(aq) + F^-(aq)$	–15	to be calculated
$Ag^+(g) \longrightarrow Ag^+(aq)$	–464	

2 (a) Define the term **enthalpy of hydration** of an ion.

[2 marks]

.....

.....

.....

.....

2 (b) Use data from **Table 2** to calculate a value for the enthalpy of hydration of the chloride ion.

[2 marks]

.....

.....

.....

.....

.....

2 (c) Suggest why hydration of the chloride ion is an exothermic process.

[2 marks]

.....

.....

.....

.....

.....

Do not write outside the box

2 (d) Silver chloride is insoluble in water at room temperature.

Use data from **Table 2** to calculate the temperature at which the dissolving of silver chloride in water becomes feasible.
Comment on the significance of this temperature value.

[4 marks]

Calculation of temperature .....

.....

.....

.....

.....

.....

Significance of temperature value .....

.....

.....

2 (e) When silver fluoride dissolves in water at 25 ºC, the free-energy change is –9 kJ mol^{-1}.

Use this information and data from **Table 2** to calculate a value, with units, for the entropy change when silver fluoride dissolves in water at 25 ºC.

[3 marks]

.....

.....

.....

.....

.....

.....

.....

13

Turn over ▶

Do not write outside the box

3 This question is about some Period 3 elements and their oxides.

3 (a) Describe what you would observe when, in the absence of air, magnesium is heated strongly with water vapour at temperatures above 373 K.
Write an equation for the reaction that occurs.

[3 marks]

Observations .....

.....

.....

.....

.....

Equation .....

3 (b) Explain why magnesium has a higher melting point than sodium.

[2 marks]

.....

.....

.....

.....

[Extra space] .....

.....

3 (c) State the structure of, and bonding in, silicon dioxide.
Other than a high melting point, give **two** physical properties of silicon dioxide that are characteristic of its structure and bonding.

[4 marks]

Structure .....

Bonding.....

Physical property 1 .....

Physical property 2 .....

Do not write outside the box

3 (d) Give the formula of the species in a sample of solid phosphorus(V) oxide.
State the structure of, and describe fully the bonding in, this oxide.

[4 marks]

Formula .....

Structure .....

Bonding .....

.....

.....

.....

3 (e) Sulfur(IV) oxide reacts with water to form a solution containing ions.

Write an equation for this reaction.

[1 mark]

.....

3 (f) Write an equation for the reaction between the acidic oxide, phosphorus(V) oxide, and the basic oxide, magnesium oxide.

[1 mark]

.....

15

Turn over for the next question

Do not write outside the box

4 Consider the following reaction scheme that starts from aqueous $[Cu(H_2O)_6]^{2+}$ ions.

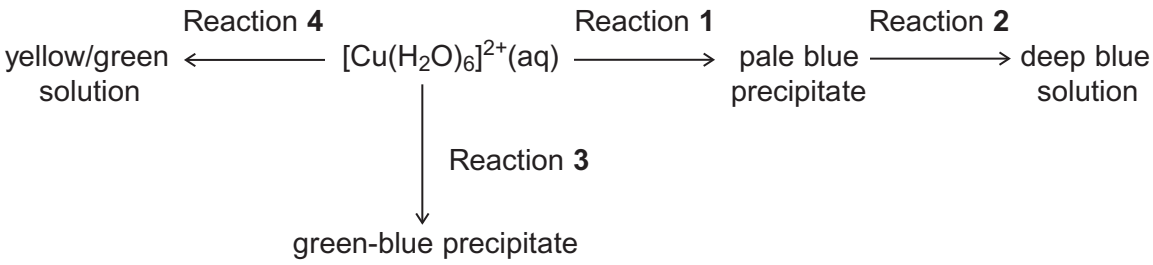

For each of the reactions **1** to **4**, identify a suitable reagent, give the formula of the copper-containing species formed and write an equation for the reaction.

4 (a) Reaction **1**

[3 marks]

Reagent .....

Copper-containing species .....

Equation .....

4 (b) Reaction **2**

[3 marks]

Reagent .....

Copper-containing species .....

Equation .....

4 (c) Reaction **3**

[3 marks]

Reagent .....

Copper-containing species .....

Equation .....

Do not write outside the box

4 (d) Reaction **4**

[3 marks]

Reagent .....

Copper-containing species .....

Equation .....

12

Turn over for the next question

Do not write outside the box

5 **Table 3** shows some standard electrode potential data.

Table 3

	$E^{\ominus}$ / V
$ZnO(s) + H_2O(l) + 2e^- \longrightarrow Zn(s) + 2OH^-(aq)$	–1.25
$Fe^{2+}(aq) + 2e^- \longrightarrow Fe(s)$	–0.44
$O_2(g) + 2H_2O(l) + 4e^- \longrightarrow 4OH^-(aq)$	+0.40
$2HOCl(aq) + 2H^+(aq) + 2e^- \longrightarrow Cl_2(g) + 2H_2O(l)$	+1.64

5 (a) Give the conventional representation of the cell that is used to measure the standard electrode potential of iron as shown in **Table 3**.

[2 marks]

.....

5 (b) With reference to electrons, give the meaning of the term **reducing agent**.

[1 mark]

.....

.....

5 (c) Identify the weakest reducing agent from the species in **Table 3**.

Explain how you deduced your answer.

[2 marks]

Species .....

Explanation .....

.....

Do not write outside the box

5 (d) When HOCl acts as an oxidising agent, one of the atoms in the molecule is reduced.

5 (d) (i) Place a tick (✓) next to the atom that is reduced.

[1 mark]

Atom that is reduced	Tick (✓)
H	
O	
Cl	

5 (d) (ii) Explain your answer to Question **5 (d) (i)** in terms of the change in the oxidation state of this atom.

[1 mark]

.....

.....

5 (e) Using the information given in **Table 3**, deduce an equation for the redox reaction that would occur when hydroxide ions are added to HOCl

[2 marks]

.....

.....

.....

Question 5 continues on the next page

Do not write outside the box

5 (f) **Table 3** is repeated to help you answer this question.

Table 3

	$E^{\ominus}$ / V
$ZnO(s) + H_2O(l) + 2e^- \longrightarrow Zn(s) + 2OH^-(aq)$	–1.25
$Fe^{2+}(aq) + 2e^- \longrightarrow Fe(s)$	–0.44
$O_2(g) + 2H_2O(l) + 4e^- \longrightarrow 4OH^-(aq)$	+0.40
$2HOCl(aq) + 2H^+(aq) + 2e^- \longrightarrow Cl_2(g) + 2H_2O(l)$	+1.64

The half-equations from **Table 3** that involve zinc and oxygen are simplified versions of those that occur in hearing aid cells.

A simplified diagram of a hearing aid cell is shown in **Figure 1**.

Figure 1

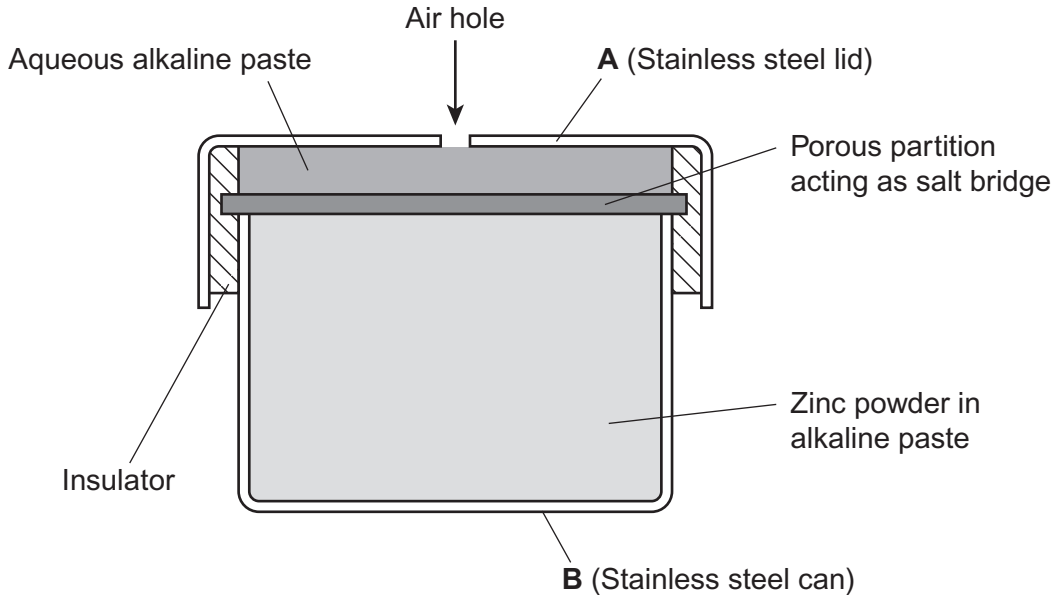

5 (f) (i) Use data from **Table 3** to calculate the e.m.f. of this cell.

[1 mark]

.....

.....

Answer = ...

Do not write outside the box

5 (f) (ii) Use half-equations from **Table 3** to construct an overall equation for the cell reaction.

[1 mark]

.....

.....

.....

5 (f) (iii) Identify which of **A** or **B**, in **Figure 1**, is the positive electrode. Give a reason for your answer.

[2 marks]

Positive electrode .....

Reason .....

.....

.....

5 (f) (iv) Suggest **one** reason, other than cost, why this type of cell is **not** recharged.

[1 mark]

.....

.....

14

Turn over for the next question

Do not write outside the box

6 Hydrogen–oxygen fuel cells are used to provide electrical energy for electric motors in vehicles.

6 (a) In a hydrogen–oxygen fuel cell, a current is generated that can be used to drive an electric motor.

6 (a) (i) Deduce half-equations for the electrode reactions in a hydrogen–oxygen fuel cell.

[2 marks]

Half-equation 1 .....

Half-equation 2 .....

6 (a) (ii) Use these half-equations to explain how an electric current can be generated.

[2 marks]

.....

.....

.....

.....

6 (b) Explain why a fuel cell does **not** need to be recharged.

[1 mark]

.....

.....

.....

6 (c) To provide energy for a vehicle, hydrogen can be used either in a fuel cell or in an internal combustion engine.

Suggest the main advantage of using hydrogen in a fuel cell rather than in an internal combustion engine.

[1 mark]

.....

.....

.....

Do not write outside the box

6 (d) Identify **one** major hazard associated with the use of a hydrogen–oxygen fuel cell in a vehicle.

[1 mark]

.....

.....

7

Turn over for the next question

Do not write outside the box

Section B

Answer **all** questions in the spaces provided.

7 The characteristic properties of transition metals include coloured ions, complex formation and catalytic activity.

7 (a) Consider the chromium complexes **P** and **Q**.

$$\underset{\substack{\text{red-violet}\\ \mathbf{P}}}{[Cr(H_2O)_6]^{3+}(aq)} \longrightarrow \underset{\substack{\text{green}\\ \mathbf{Q}}}{[Cr(H_2O)_5Cl]^{2+}(aq)}$$

Explain, with reference to oxidation states and electron configurations, why the chromium ions in complexes **P** and **Q** contain the same number of d electrons. You should **not** consider the electrons donated by the ligands.

Explain, in terms of electrons, why the complexes are **different** colours. (You are **not** required to explain why the observed colours are red-violet and green.)

[6 marks]

.....

.....

.....

.....

.....

.....

.....

.....

.....

.....

.....

.....

.....

.....

.....

Do not write outside the box

7 (b) Write an equation to show how the $[Co(NH_3)_6]^{2+}(aq)$ ion reacts with 1,2-diaminoethane. Explain the thermodynamic reasons why this reaction occurs.

[5 marks]

.....

.....

.....

.....

.....

.....

.....

.....

.....

.....

.....

.....

Question 7 continues on the next page

Do not write outside the box

7 (c) The toxic complex cisplatin is an effective anti-cancer drug because it reacts with the DNA in cancer cells, preventing cell division.

7 (c) (i) Draw the **displayed** structure of cisplatin.
On your structure, show the value of one of the bond angles at platinum.
State the charge, if any, on the complex.

[3 marks]

7 (c) (ii) When cisplatin is ingested, an initial reaction involves one of the chloride ligands being replaced by water.

Write an equation for this reaction.

[1 mark]

.....

7 (c) (iii) Suggest how the risk associated with the use of this drug can be minimised.

[1 mark]

.....

.....

.....

Do not write outside the box

7 (d) Explain, with the aid of equations, how and why vanadium(V) oxide is used in the Contact Process.

[4 marks]

.....

.....

.....

.....

.....

.....

.....

.....

.....

20

Turn over for the next question

Do not write outside the box

8 A student carried out an experiment to find the mass of $FeSO_4.7H_2O$ in an impure sample, **X**.
The student recorded the mass of **X**. This sample was dissolved in water and made up to 250 cm^3 of solution.
The student found that, after an excess of acid had been added, 25.0 cm^3 of this solution reacted with 21.3 cm^3 of a 0.0150 mol dm^{-3} solution of $K_2Cr_2O_7$

8 (a) Use this information to calculate a value for the mass of $FeSO_4.7H_2O$ in the sample of **X**.

[5 marks]

.....

.....

.....

.....

.....

.....

.....

.....

.....

.....

.....

.....

Do not write outside the box

8 (b) The student found that the calculated mass of $FeSO_4.7H_2O$ was greater than the actual mass of the sample that had been weighed out. The student realised that this could be due to the nature of the impurity.

Suggest **one** property of an impurity that would cause the calculated mass of $FeSO_4.7H_2O$ in **X** to be greater than the actual mass of **X**.
Explain your answer.

[2 marks]

.....

.....

.....

.....

7

END OF QUESTIONS

There are no questions printed on this page

DO NOT WRITE ON THIS PAGE
ANSWER IN THE SPACES PROVIDED

Copyright © 2014 AQA and its licensors. All rights reserved.